# 1 INTRODUCTION

Test Research Inc. (TRI) designs, manufactures and markets precision test equipment for the world's leading electronics manufacturing service (EMS) companies. Product lines include Automated Optical Inspection (AOI) and Automated X-Ray Inspection (AXI), In-Circuit Testers, Board Testers, Solder-Paste Inspection and Manufacturing Defects Analyzers.

The purpose of this White Paper is to give a brief introduction to the various technologies involved in Automated Optical Inspection technology as it is applied in the manufacturing of printed circuit boards (PCBs) and printed circuit board assemblies (PCBAs).

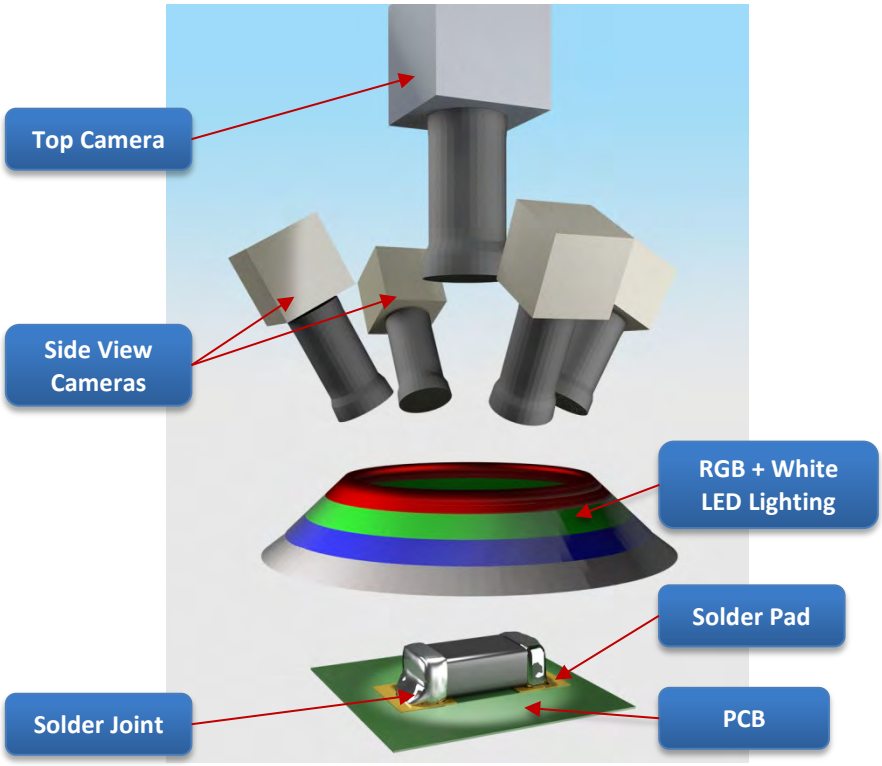


***In AOI Inspection, LED Light illuminates an object to be captured by the inspection camera(s).***

Optical inspection has traditionally been a basic function of humans. Think of how we examine something: hold it out at arm's length and look at it. Sometimes, the room is dark or there's some fine print. We then move to where the light is better or hold the object closer to get a better look. Lighting, distance and focus. These are the key elements of human optical inspection. Automated optical inspection includes these three elements, while increasing speed and inspection repeatability as components get smaller and more difficult for the human eye to distinguish.

# 2 LIGHTING

High quality illumination of the component or area to be inspected is essential for AOI. Obviously, the AOI system must be able to see the parts and features to be able to perform the inspection. In addition, color lighting is very effective in eliminating background image noise.

Early AOI systems used incandescent, fluorescent, infrared (IR), or ultraviolet (UV) lighting. Currently, almost all AOI systems used for PCBA inspection use LEDs (light-emitting diodes) as the light source. TRI's lighting system includes white, red, green, and blue (RGB-W) LEDs in a configurable lighting module.

The angle of the lighting is also important. Taller components on a PCBA can block the light from reaching shorter components, while some features require very low angle illumination to be visible. It is important for AOI systems to have light sources from different angles to offer the best overall illumination.

The figure below illustrates how different lighting configurations affect visibility of different features. Choosing the correct light setup to inspect each feature can strongly influence inspection accuracy.

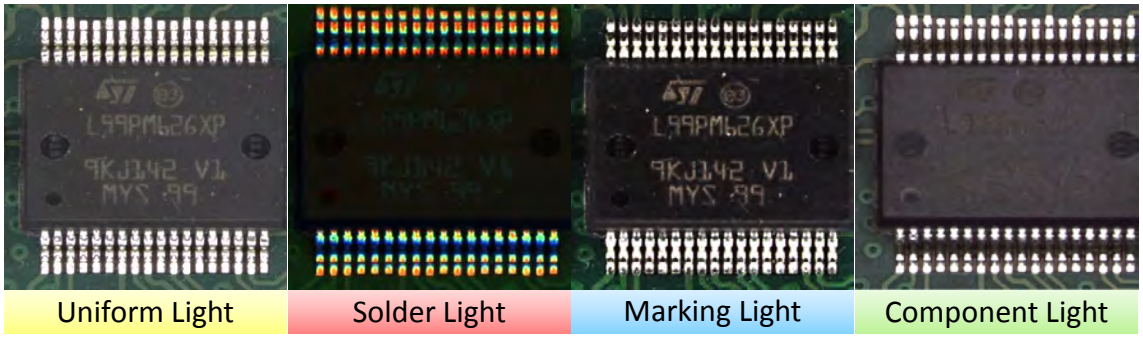


***Different lighting configurations illuminate different features of a PCBA.***

# 3 CAMERA

An AOI camera can be the most expensive component in the system. Users need to evaluate the price/performance trade-off between a single-camera system and the more expensive multi-camera systems which offer increased coverage

## 3.1 CAMERA RESOLUTION

Current AOI systems employ cameras ranging from XGA to multi megapixel high resolution sensors. The cameras can generate monochrome (black and white) or color images. This means that each picture frame will have from 768 thousand up to several million data points.

Newest cameras can capture over 100 frames per second. Multiplying the above numbers shows that an AOI system is capable of generating a tremendous amount of data as it scans a PCB assembly. This needs to be matched by the computing power and processing software of the AOI system, otherwise the data becomes useless.

### 3.1.1 CAMERA VS. SYSTEM RESOLUTION

One of the key parameters of an automated inspection system is the optical system resolution (also known as imaging resolution, or per-pixel resolution), which determines how much detail the AOI can see. Most current AOI systems have the imaging resolution factory-set by their manufacturer to achieve a stable, optimized performance.

Choosing a suitable system resolution is one of the key parameters when selecting an AOI solution and typically involves the required inspection speed, inspection accuracy and size of the smallest component used on the PCB.

The system resolution is determined by a combination of the camera's sensor, lens and the distance from the PCB.

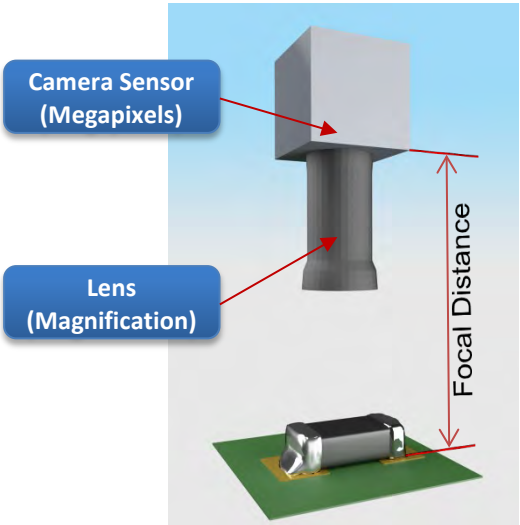


***System Resolution is determined by a combination of Focal Distance, Lens and Camera Sensor.***

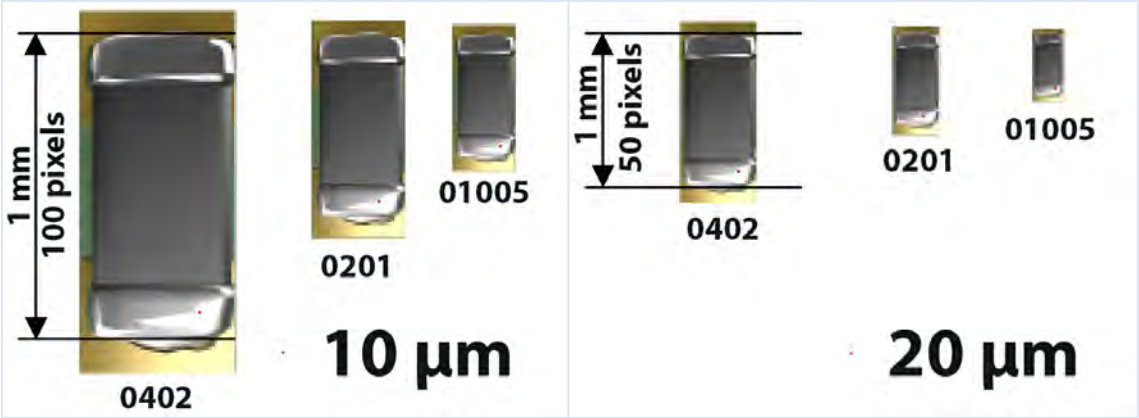


***Chart of common SMT device sizes as seen through 10 or 20 µm resolution AOI. 10 µm system resolution means that each camera pixel corresponds to a 10 µm square of the PCB, and as a result, 1 mm of the PCB is represented by 100 pixels .***

### 3.1.2 FIELD OF VIEW

The resolution of the camera sensor determines the field of view given the AOI system's imaging resolution. FOV is the PCB area covered by a single image. Larger FOVs mean the PCB can be scanned using fewer images, but camera sensors with very high number of imaging sites (camera pixels) also need more time to acquire each image, resulting in a lower number of frames per second.

Although cameras with lower pixel count have smaller FOVs, each of their individual pixels is larger and needs much less time to capture a new frame. The resulting high frame rate can be used to cover a large PCB area using dynamic imaging without stopping to take each frame.

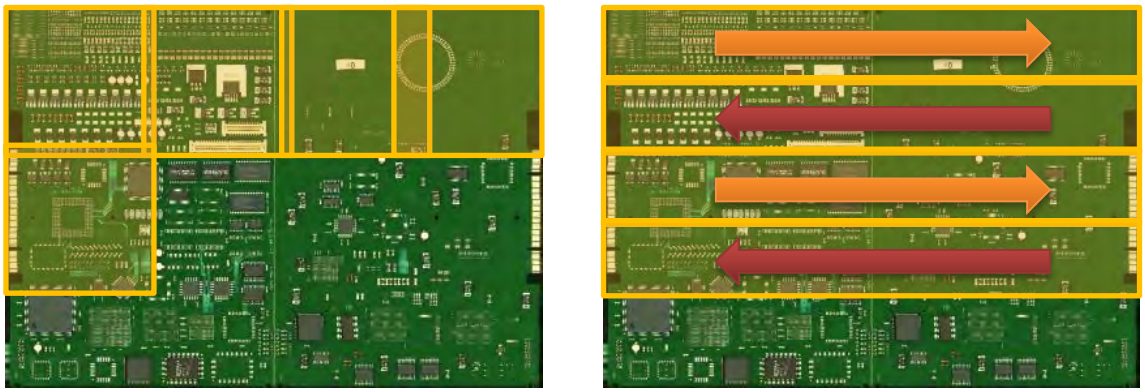

***High megapixel Stop-and-Go vs. Lower megapixel Dynamic Imaging system***

## 3.2 CAMERA CONFIGURATION

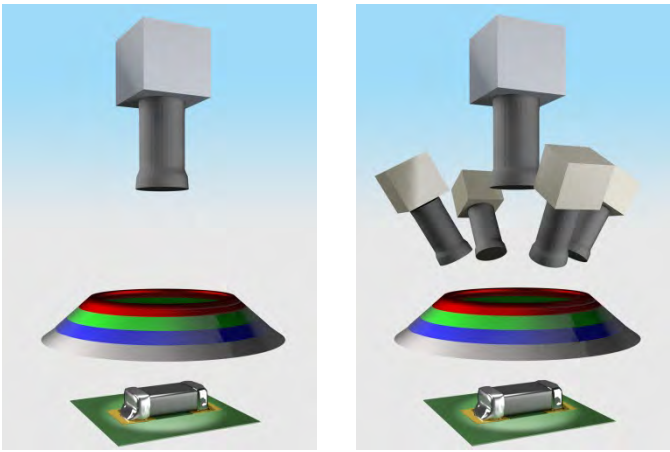

*Single vs. multi-camera system diagram with four side view cameras*

Single-camera AOI systems are the most commonly used. They are best suited to find missing and misaligned components, and inspect most common solder joints.

Multi-angle camera systems can provide side view cameras for front, rear, left and right viewing angle in addition to the top camera. The angle cameras are the best solution for solder joint and lifted lead inspection.

The table below lists the best camera solution for inspecting different features and defects:

| | Single Camera | Multi-Angle Cameras |
|---|---|---|
| **Area Defects** | ● | |
| **Billboarding** | | ● |
| **Component offset** | ● | |
| **Component polarity** | ● | |
| **Component presence/absence** | ● | |
| **Component skew** | ● | |
| **Excessive solder joints** | | ● |
| **Flipped component** | ● | |
| **Tilt Defects** | | ● |
| **Insufficient paste around Leads** | ● | |
| **Insufficient solder joints** | ● | |
| **Lifted leads** | | ● |
| **No-population tests** | ● | |
| **Paste registration** | | ● |
| **Severely damaged components** | ● | |
| **Solder bridges** | ● | |
| **Tombstoning** | | ● |
| **Volume defects** | ● | |
| **Wrong part** | ● | |

# 4 3D Inspection Technology

Some specific inspection requirements cannot be easily met with traditional two-dimensional camera inspection technology. These include lifted components, lifted leads, oversized and tall components and many applications in automotive high density electronics industries.

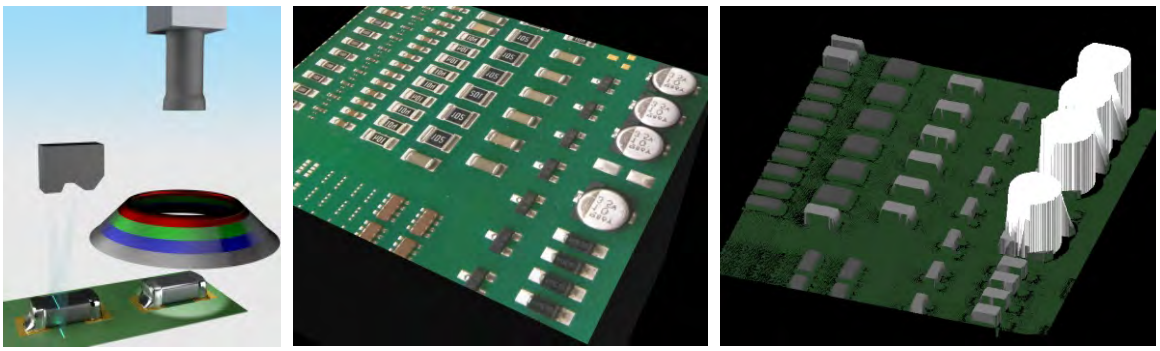

***Combination of 2D and 3D inspection technologies offers widest coverage.***
***Left: Laser 3D height sensor coupled to an AOI camera***
***Center: 2D image data***
***Right: 3D profile data***

## 4.1 Advantages

3D inspection technology overcomes some limitations of camera based AOI, offering high measurement range, high dynamic range and providing intuitive 3D reconstructed models of components for intuitive review. This makes it ideal for post-reflow inspection.

### 4.1.1 High Measurement Range

Camera based systems offer a limited depth of field of several millimeters, causing tall components, such as capacitors to be out of focus and impossible to inspect.

Laser 3D technology enables inspection of components up to 25 mm high, with 1 µm resolution across the entire range. This allows inspection of tall or atypical components, such as switches, connectors, coils and other problematic parts found in complex assemblies.

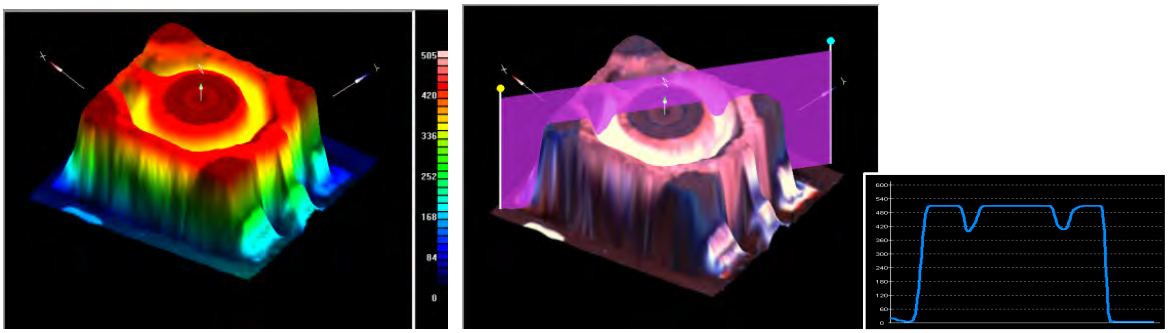

***3D switch inspection result, with reconstruction image and 2D cross-section.***

Large measurement range with high precision measurement extends the application range of 3D AOI to high precision assemblies, checking alignment of components, cameras, connectors, and mounting hardware with close tolerances.

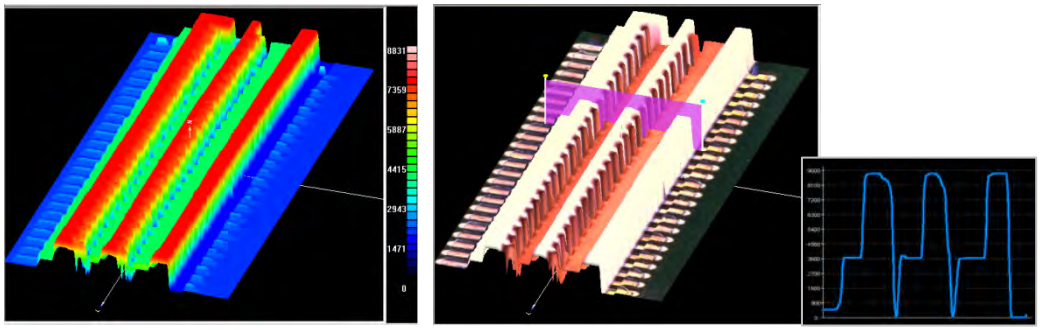

*3D reconstruction of an SMT connector with a cross-section profile.*

### 4.1.2 Lifted Leads, Chips and BGAs

Lifted leads, chips and BGAs are common post-reflow defects which are difficult to detect using top-view camera inspection.

3D Inspection offers an alternative to multi-camera systems and costly X-ray inspection and allows accurate coverage of many post-reflow defects.

Realistic 3D reconstruction models also make it easier for operators to review detected defects and identify any false calls.

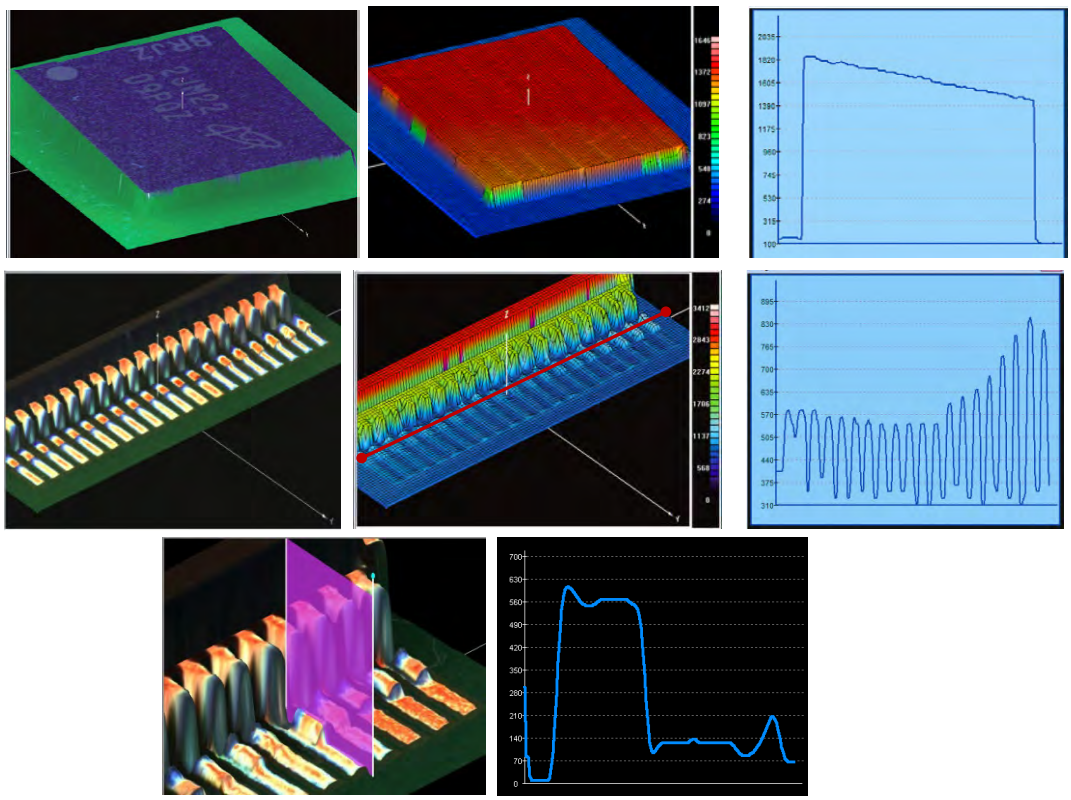

*3D inspection of lifted joints, BGAs and chips offers accurate defect coverage*

### 4.1.3 HIGH DYNAMIC RANGE

One of the critical obstacles presented to some 3D inspection technologies are reflective and black components, which commonly overload the dynamic range of the inspection camera with specular reflections or very dark, low contrast images.

This combination of glossy and opaque objects interferes with fringe pattern detection and prevents this otherwise advanced technology from taking accurate measurements.

TRI overcomes this problem with the TR7730 by incorporating a laser 3D system that can inspect high dynamic range components and accurately determine any lifted component problems.

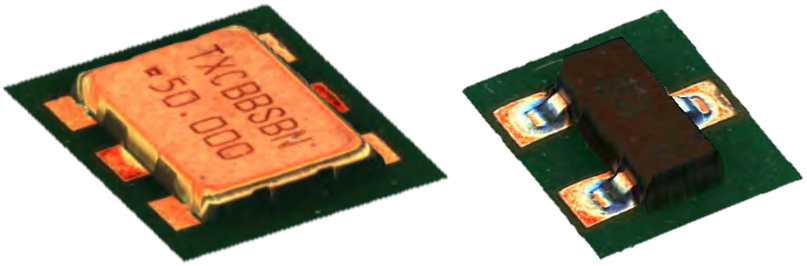


***Reflective and black opaque components cannot be reliably inspected using conventional imaging***

# 5 DATA ACQUISITION

AOI systems are capable of acquiring vast amounts of data. Filtering out unnecessary data and selecting only useful information are the keys for fast and efficient operation.

During the design process of a PCBA, the designer generates a CAD file that shows the mechanical position of all components on a board. This information is fed into the AOI system and is used to establish reference points. The design files also include a component list, giving the type of component and its value. Many AOI systems' software includes a database of standard component libraries. The PCBA component list is matched with the existing libraries. Components not in the libraries need to be identified and added manually.

Smaller PCBAs, such as those for mobile phones, come in multi-board panels. These can include two or more – sometimes even 16 – PCBAs in one board. The AOI system learns the component placement for one PCBA, and then duplicates it for the remaining PCBAs. Since sometimes these are placed at 90° or 180°angles in relation to the first board, the system must be able to make the adjustments needed to inspect the same components on all boards in a panel.

The figure below shows a typical flow of TRI's automatic test program generator (ATPG) which helps production engineers design testing programs for new products.


***AOI programming flow on TRI's systems***

After programming is complete, the inspection program must usually be fine-tuned on production samples to eliminate false positives and omitted defects. When the inspection system is optimized, it allows the operator to monitor production quality, eliminate defective boards and increase final production yields of conforming products.

# 6 Machine Types

AOI systems come in Desktop and Inline configurations.

Desktop (or “benchtop”) systems are small, compact systems designed for standalone use. PCBAs are loaded and unloaded manually by an operator. Desktop systems are designed for low- to mid-volume production of PCBAs. Although most desktop systems have just one camera, there are a few full-featured desktop systems that are configured with multiple cameras.

Inline systems are part of the PCBA manufacturing line. Boards are automatically loaded and unloaded. Inline systems can be located both before and after the reflow process, depending on the needs of the manufacturer. Due to their strategic placement in the production process, inline AOI systems must have sufficient resources to handle the hardware and data processing requirements so that they do not become a bottleneck in the manufacturing line.


***TRI’s TR7700 SIII DT desktop system (left) and TR7700 SIII inline system (right)***

Deployment strategy of AOI systems depends on the manufacturer’s requirements. In most cases, inline AOI is used for post-reflow inspection of finished solder joints; in special cases some EMS vendors also use AOI systems to verify component placement precision before solder paste reflow.

# 7 CONCLUSION

Selection of an AOI system is a complex process which depends on many variables, including customer's manufacturing process, inspected product complexity, production volume, required inspection coverage and cost, among many others. TRI offers an extensive portfolio of AOI solutions suitable for various environments, from small desktop products to high performance integrated in-line systems capable of inspecting even very large and complex boards while connected to a high volume production line.

TRI's One Stop Solution offers the most robust product portfolio in the industry for Automatic Test and Inspection solutions. From Solder Paste Inspection (SPI), Automated Optical Inspection (AOI), and 3D Automated X-ray Inspection (AXI) systems to Manufacturing Defect Analyzers (MDAs) and In-Circuit Test equipment, TRI provides the most cost-effective solutions to meet a comprehensive range of manufacturing Test and Inspection requirements.

## TRI's One-Stop Solution for PCBA Test and Inspection

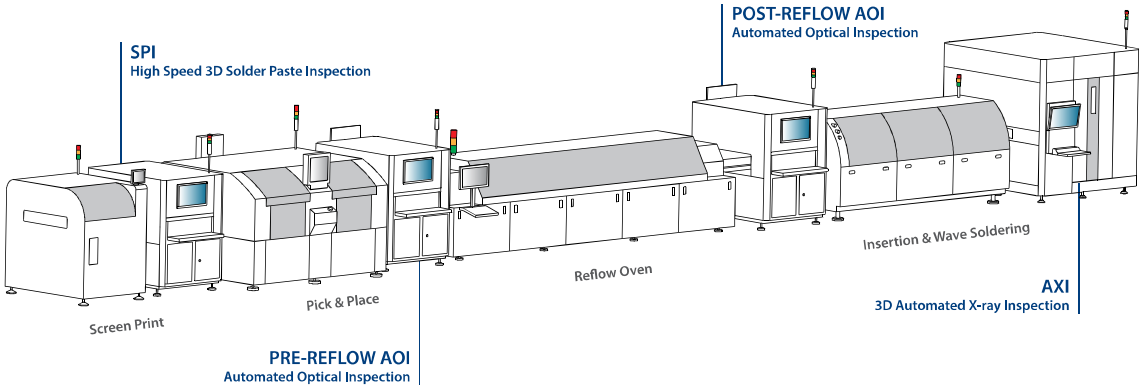


***TRI's One Stop Solution offers a complete inspection portfolio for PCBA production.***

To find out more about TRI's inspection solutions, visit www.tri.com.tw or write an email to sales@tri.com.tw

**TRI White Paper**
**Introduction to Automated Optical Inspection (AOI) Technology**
**Ver. 2.0.0**
**Written by**: Ondrej Simecek, TRI Marketing Dept.



For any comments/corrections to this document, please address them to –
sales@tri.com.tw
with "TRI White Paper – Introduction to AOI Technology" in the Subject field.

www.tri.com.tw